Connecting the Explorer® 3250HD™ to an HDTV
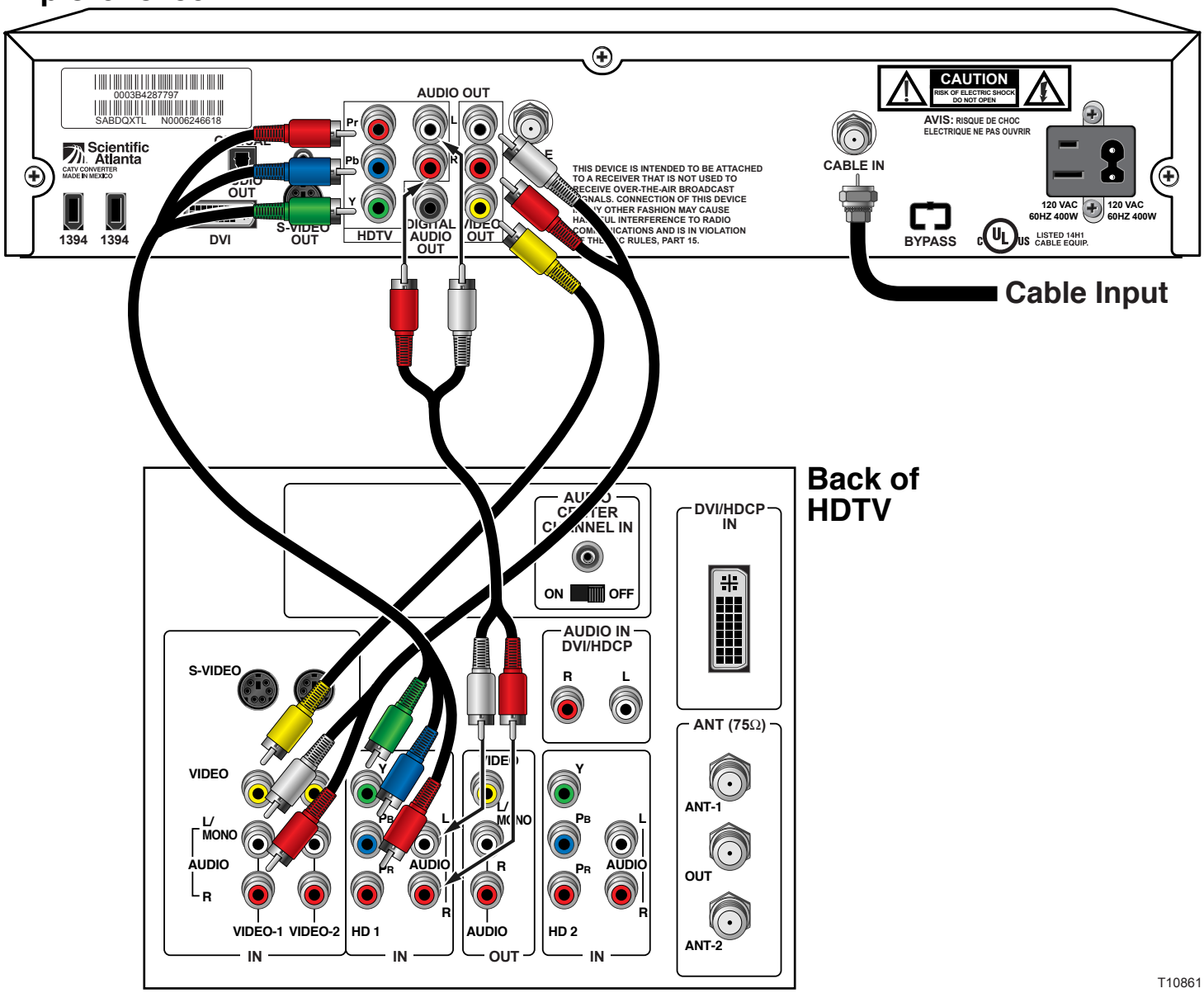
Explorer 3250HD